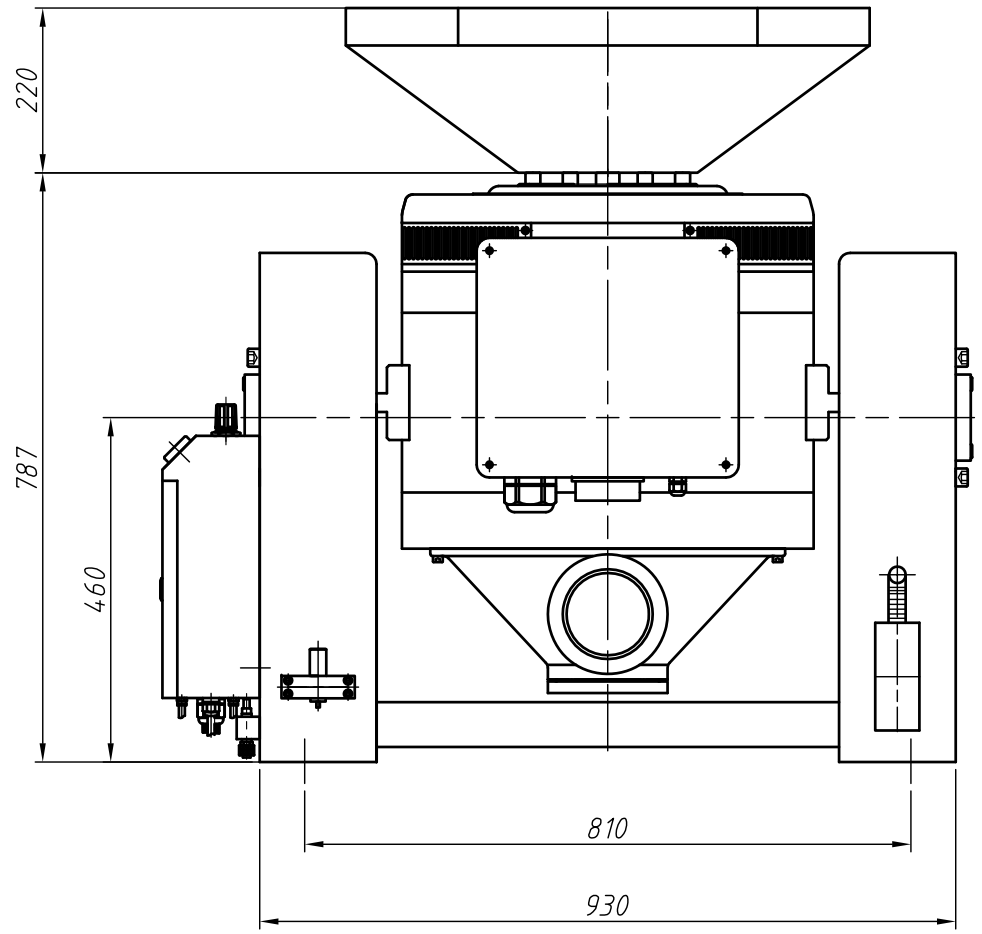

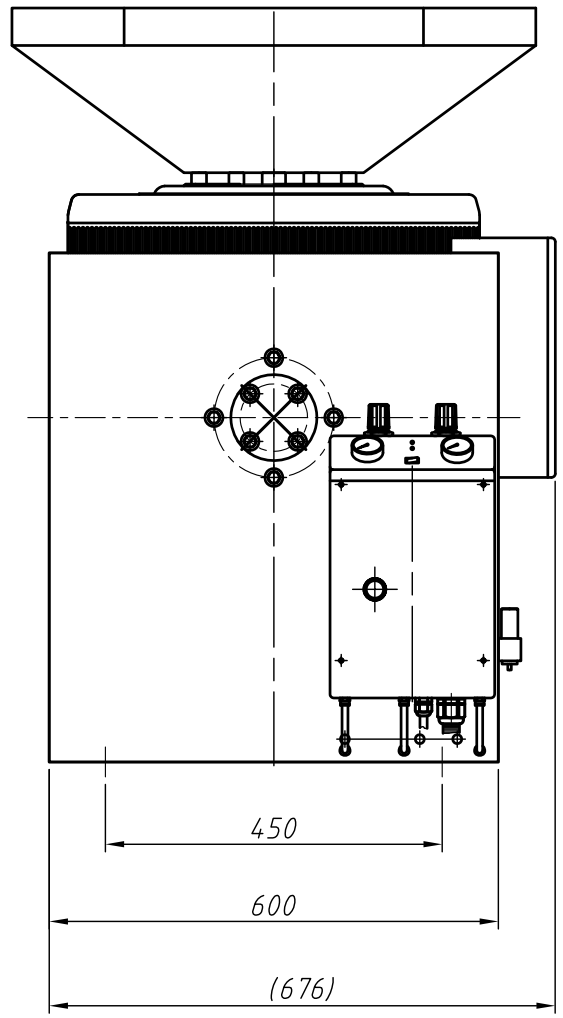

HE

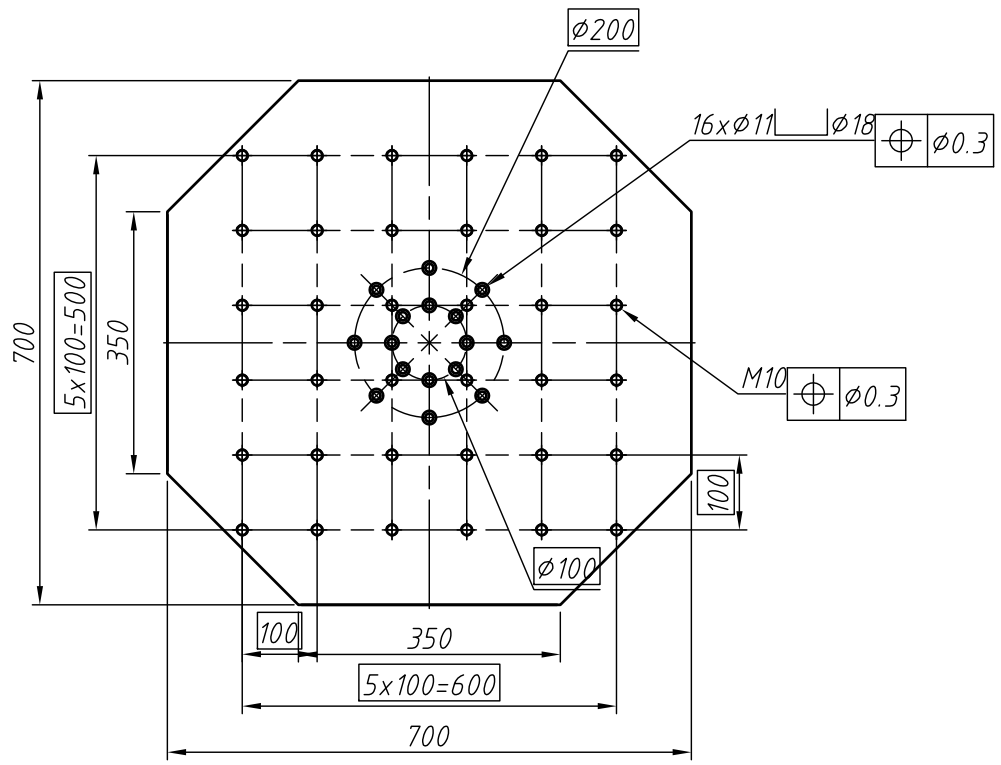

Armature

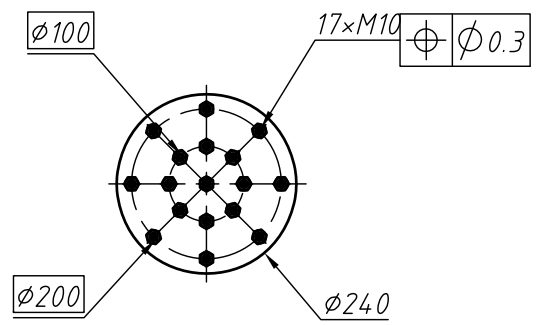

DW2108-238

						Material
Mark	Signature	Date	Modified NO.	Itemref	Area	
Designed			Standard			Drawing Mark / Mass / Scale
Checked						
Audit						
Craft			Approved			Sheet /

DONGLING
DongLing Technologies CO.,Ltd

Outdrawing

ES-10-240/HE700SM